SUBJECT PAGE NO.

A.1 CONNECTORS..... A-1
A.2 WIRING DIAGRAMS..... A-4

NOTES

CONNECTOR LOCATIONS

Function/Location

All vehicle connectors are identified by their function and location. Refer to Table A-1.

Place and Color

The place (number of wire cavities of a connector housing) and color of the connector can also aid identification.

Connector Number

On wiring diagrams and in service instructions, connectors are identified by a number in brackets.

Repair Instructions

The repair instructions in Appendix B of the electrical diagnostic manual (EDM) are by connector type. Refer to Table A-1.

Table A-1. Dyna Connector Locations

NO.	DESCRIPTION	TYPE	TERMINAL PROBE COLOR	LOCATION
[7]	Tail lamp harness to main harness	8-place Tyco 070 Multilock Unsealed (BK)	Gray	Under seat
[18]	Right rear turn signal	4-place Tyco 070 Multilock Unsealed (BK) (except FLD, FXD/C/L) 2-place Tyco 070 Multilock Unsealed (BK) (FLD, FXD/C/L)	Gray	Inside tail lamp lens
[19]	Left rear turn signal	4-place Tyco 070 Multilock Unsealed (BK) (except FLD, FXD/C/L) 2-place Tyco 070 Multilock Unsealed (BK) (FLD, FXD/C/L)	Gray	Inside tail lamp lens
[20]	Console gauges/instrument lamps	8-place Molex MX 150 Sealed (BK)	Gray	Under console (except FXDB) Inside top frame tube (FXDB)
[22-1]	Right hand controls	4-place JAE MX19 Sealed (BK)	Yellow	Inside top frame tube
[22-2]	Right hand controls	2-place JAE MX19 Sealed (BK)	Yellow	Inside top frame tube
[24]	Left hand controls	4-place JAE MX19 Sealed (BK)	Yellow	Inside top frame tube
[29]	Position lamp (HDI)	Spade terminals	Red	Behind headlamp
[31L]	Left directional and DOM running lamps	3-place Tyco 070 Multilock Unsealed (BK)	Gray	Inside top frame tube
[31R]	Right directional and DOM running lamps	3-place Tyco 070 Multilock Unsealed (BK)	Gray	Inside top frame tube
[33]	Ignition switch	2-place Delphi GT 150 Sealed (GY)	Gray	Under fuel tank console (except FXDB) Inside top frame tube (FXDB)
[38]	Headlamp	4-place Tyco 070 Multilock Unsealed (BK)	Gray	Inside top frame tube (FXDB) Behind headlamp (except FXDB)
[39]	Speedometer	12-place Delphi Micro 64 Sealed (GY)	Breakout Box	Back of speedometer
[40]	LP, stop, and tail lamp	4-place Deutsch DT Sealed (FXDWG) (GY) 4-place Tyco 040 Multilock unsealed (BK) FXDF, FXDB/P	Brown Gray	Inside tail lamp lens Next to LP Lamp
[47]	Voltage regulator to stator	3-place Dekko (BK)	Green	Back of voltage regulator
[64]	Fuse block	Delphi 280 Metri-pack Sealed Delphi 800 Metri-pack Sealed (main fuse)	Purple/Red	Under left side cover
[65]	VSS	3-place Delphi GT 150 3.5 Sealed (BK)	Gray	Top of transmission case
[77]	Voltage regulator	2-place Dekko (BK)	Green	Back of voltage regulator

Table A-1. Dyna Connector Locations

NO.	DESCRIPTION	TYPE	TERMINAL PROBE COLOR	LOCATION
[78-1]	ECM	18-place Tyco GET 64 (BK)	Breakout Box	Under left side cover
[78-2]	ECM	18-place Tyco GET 64 (GY)	Breakout Box	Under left side cover
[79]	CKP sensor	2-place Deutsch DTM Sealed (BK)	Brown	Back of voltage regulator bracket
[80]	MAP sensor	3-place Delphi 150 Metri-Pack Sealed (GY)	Gray	Top of induction module
[83]	Ignition coil	4-place Delphi GT 150 Sealed (BK)	Gray	Back of coil
[84]	Front fuel injector	2-place Delphi GT 150 3.5 Sealed (GY)	Gray	Beneath fuel tank
[85]	Rear fuel injector	2-place Delphi GT 150 3.5 Sealed (GY)	Gray	Beneath fuel tank
[87]	IAC	4-place Delphi GT 150 3.5 Sealed (BK)	Gray	Top of induction module
[88]	TPS	3-place Delphi GT 150 Sealed (BK)	Gray	Behind air cleaner backing plate
[89]	IAT sensor	2-place Delphi GT 150 3.5 Sealed (GY)	Gray	Behind air cleaner backing plate
[90]	ET sensor	2-place Delphi GT 150 Sealed (BK)	Gray	Back of front cylinder, left side
[91]	DLC	6-place Deutsch DT Sealed (GY)	Black	Under left side cover
[93]	Tail lamp	4-place Tyco 070 Multilock Unsealed (BK)	Gray	Inside tail lamp lens (except FXDB)
[94]	Rear fender lights harness in circuit board	6-place Tyco 070 Multilock Unsealed (BK) (FLD, FXD/C/L) 3-place Delphi 150 Metri-Pack (BK) (FXDF)	Gray	Circuit board under tail lamp assembly (FLD, FXD/C/L) Tail Lamp (FXDF)
[95]	Purge solenoid	2-place Delphi 150 Metri-Pack Sealed (BK)	Purple	Behind coil left side
[108]	Tachometer	12-place Delphi Micro 64 (GY)	Breakout Box	Back of tachometer
[117]	Fuel gauge	4-place Tyco 040 Unsealed (BK)	Gray	Under fuel tank
[120]	Oil pressure switch	Right angle push on molded terminal (BK)		Front of right crankcase
[121]	Rear stop lamp switch	Tyco Insulated Spade terminal (BK)	Red	Right side of transmission
[122]	Horn	Spade terminals (BK)	Red	Between cylinders, left side
[128]	Starter solenoid	Spade terminal (W)	Red	Top of starter
[131]	Neutral switch	Right angle push on molded terminal (BK)		Top of transmission
[133]	JSS	3-place Molex MX 150 Sealed (BK)	Gray	Under seat
[137]	Rear HO2S	4-place Molex MX 150 Sealed (BK)	Gray	Under seat
[138]	Front HO2S	4-place Molex MX 150 Sealed (BK)	Gray	Behind voltage regulator
[141]	Fuel pump and sender	4-place Delphi GT 150 Sealed (BK)	Gray	Top of fuel tank

Table A-1. Dyna Connector Locations

NO.	DESCRIPTION	TYPE	TERMINAL PROBE COLOR	LOCATION
[142]	Security siren (optional)	3-place Delphi GT 150 Sealed (BK)	Gray	Under seat
[166]	ABS ECU	18-place Tyco (BK)	Breakout Box	Under battery
[167]	Front WSS	2-place Deutsch DTM Sealed (BK)	Brown	Inside top frame tube
[168]	Rear WSS	2-place Deutsch DTM Sealed (BK)	Brown	Under seat
[178]	Active intake solenoid	2-place Tyco Superseal 1.5 Sealed (BK)	Gray	Air cleaner backing plate
[179]	Active exhaust	5-place Tyco Superseal 1.5 Sealed (BK)	Gray	Above starter
[203F]	ACR (front)	2-place Tyco Superseal 1.5 Sealed	Gray	Bracket attached to the throttle body
[203R]	ACR (rear)	2-place Tyco Superseal 1.5 Sealed	Gray	Bracket attached to the throttle body
[209]	Security antenna	2-place Molex MX 64 Unsealed (BK)	Light Blue	Under seat
[222]	Ignition switch harness	2-place Deutsch DTM Sealed Gray (GY)	Brown	Inside top frame tube (FXDB)
[233]	License plate lamp	2-place Tyco 040 Multilock unsealed (BK)	Gray	Inside tail lamp housing
[242]	BCM	48-place Molex CMC Sealed (BK)	Breakout Box	Under left side cover
[259]	BCM battery power	1-place Delphi 800 Metri-Pack Sealed (BK)		Under left side cover
[GND1] [GND2]	Harness grounds	Ring terminals		Under seat

WIRING DIAGRAM INFORMATION

Wire Color Codes

Wire traces on wiring diagrams are labeled with alpha codes. Refer to Table A-2.

For Solid Color Wires: See Figure A-1. The alpha code identifies wire color.

For Striped Wires: The code is written with a slash (/) between the solid color code and the stripe code. For example, a trace labeled GN/Y is a green wire with a yellow stripe.

Wiring Diagram Symbols

See Figure A-1. On wiring diagrams and in service/repair instructions, connectors are identified by a number in brackets [ ]. The letter inside the brackets identifies whether the housing is a socket or pin housing.

A=Pin: The letter A and the pin symbol after a connector number identifies the pin side of the terminal connectors.

B=Socket: The letter B and the socket symbol after a connector number identifies the socket side of the terminal connectors. Other symbols found on the wiring diagrams include the following:

Diode: The diode allows current flow in one direction only in a circuit.

Wire break: The wire breaks are used to show option variances or page breaks.

No Connection: Two wires crossing over each other in a wiring diagram that are shown with no splice indicating they are not connected together.

Circuit to/from: This symbol indicates a more complete circuit diagram on another page. The symbol is also identifying the direction of current flow.

Splice: Splices are where two or more wires are connected together along a wiring diagram. The indication of a splice only indicates that wires are spliced to that circuit. It is not the true location of the splice in the wiring harness.

Ground: Grounds can be classified as either clean or dirty grounds. Clean grounds are identified by a (BK/GN) wire and are normally used for sensors or modules.

NOTE

Clean grounds usually do not have electric motors, coils or anything that may cause electrical interference on the ground circuit.

Dirty grounds are identified by a (BK) wire and are used for components that are not as sensitive to electrical interference.

Twisted pair: This symbol indicates the two wires are twisted together in the harness. This minimizes the circuit's electromagnetic interference from external sources. If repairs are necessary to these wires they should remain as twisted wires.

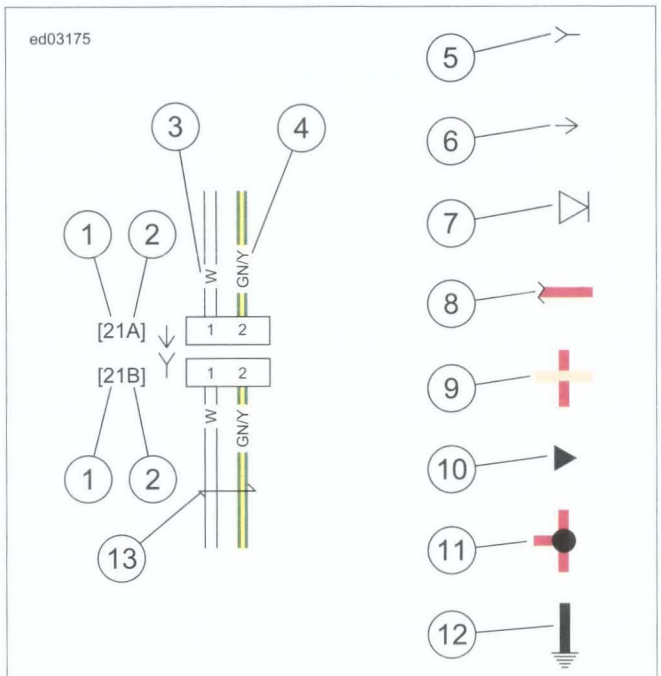

1. **Connector number**
2. **Terminal code (A=pin, B=socket)**
3. **Solid wire color**
4. **Striped wire color**
5. **Socket symbol**
6. **Pin symbol**
7. **Diode**
8. **Wire break**
9. **No connection**
10. **Circuit to/from**
11. **Splice**
12. **Ground**
13. **Twisted pair**

Figure A-1. Connector/Wiring Diagram Symbols

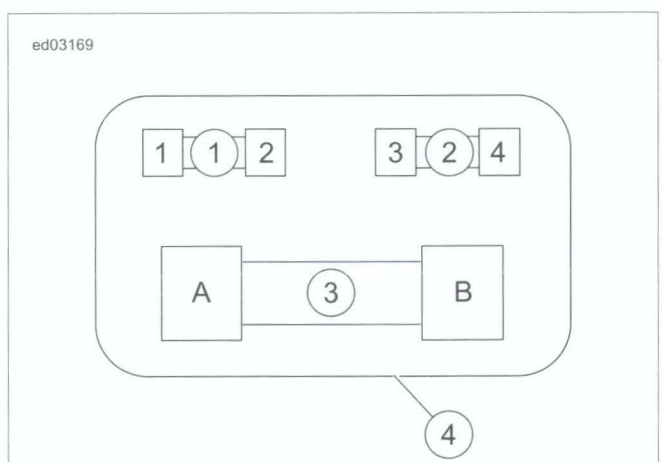

1. **Battery**
2. **P&A**
3. **Main**
4. **Fuse block [64]**

Figure A-2. Fuse Block and Socket Terminals

Table A-2. Wire Color Codes

ALPHA CODE	WIRE COLOR
BE	Blue
BK	Black
BN	Brown
GN	Green
GY	Gray
LBE	Light Blue
LGN	Light Green
O	Orange
PK	Pink
R	Red
TN	Tan
V	Violet
W	White
Y	Yellow

Refer to the table below for wiring diagram information.

Wiring Diagram List

DIAGRAM	LOCATION
Battery Power Distribution	Figure A-3
Ignition and Accessory Power Distribution: 1 of 3	Figure A-4
Ignition and Accessory Power Distribution: 2 of 3	Figure A-5
Ignition and Accessory Power Distribution: 3 of 3	Figure A-6
Sensor Grounds	Figure A-7
Ground Circuit: 1 of 3	Figure A-8
Ground Circuit: 2 of 3	Figure A-9
Ground Circuit: 3 of 3	Figure A-10
Front Lighting and Hand Controls: 2016 Dyna	Figure A-11
Main Harness 1 of 3 (except FXDL): 2016 Dyna	Figure A-12
Main Harness 2 of 3 (FXDL): 2016 Dyna	Figure A-13
Main Harness 3 of 3: 2016 Dyna	Figure A-14
Rear Lighting: 2016 Dyna	Figure A-15

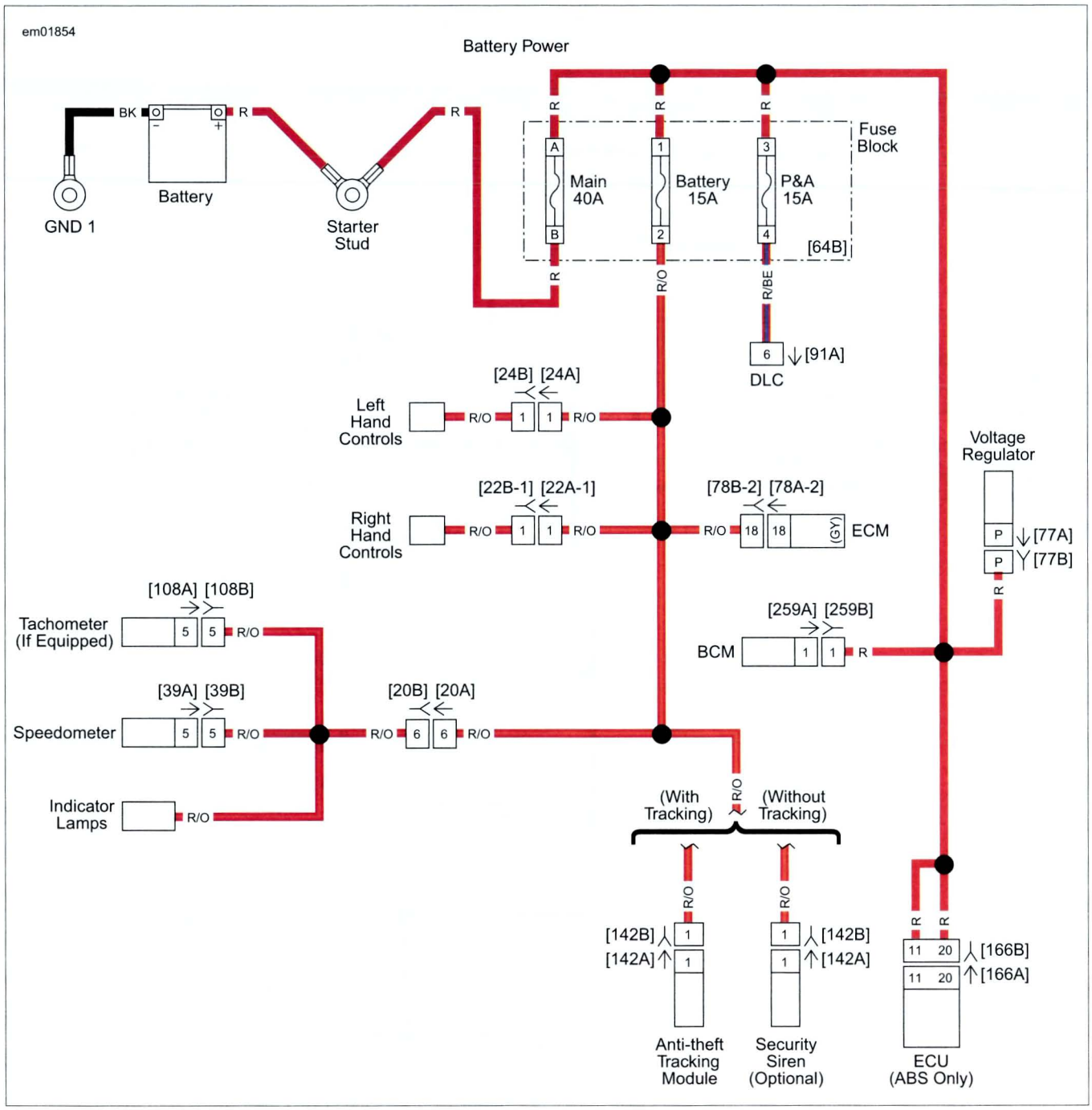

Figure A-3. Battery Power Distribution

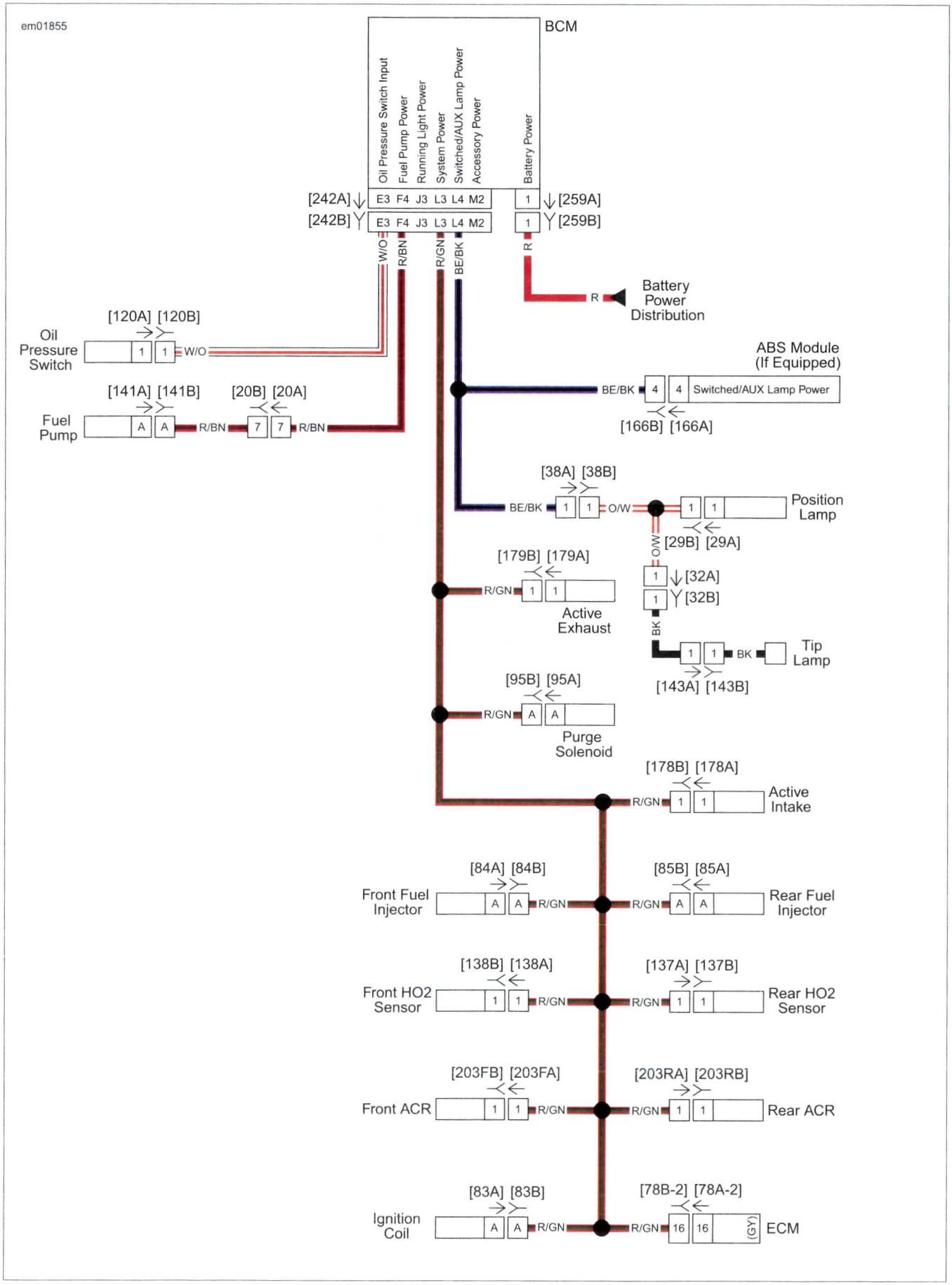

Figure A-4. Ignition and Accessory Power Distribution: 1 of 3

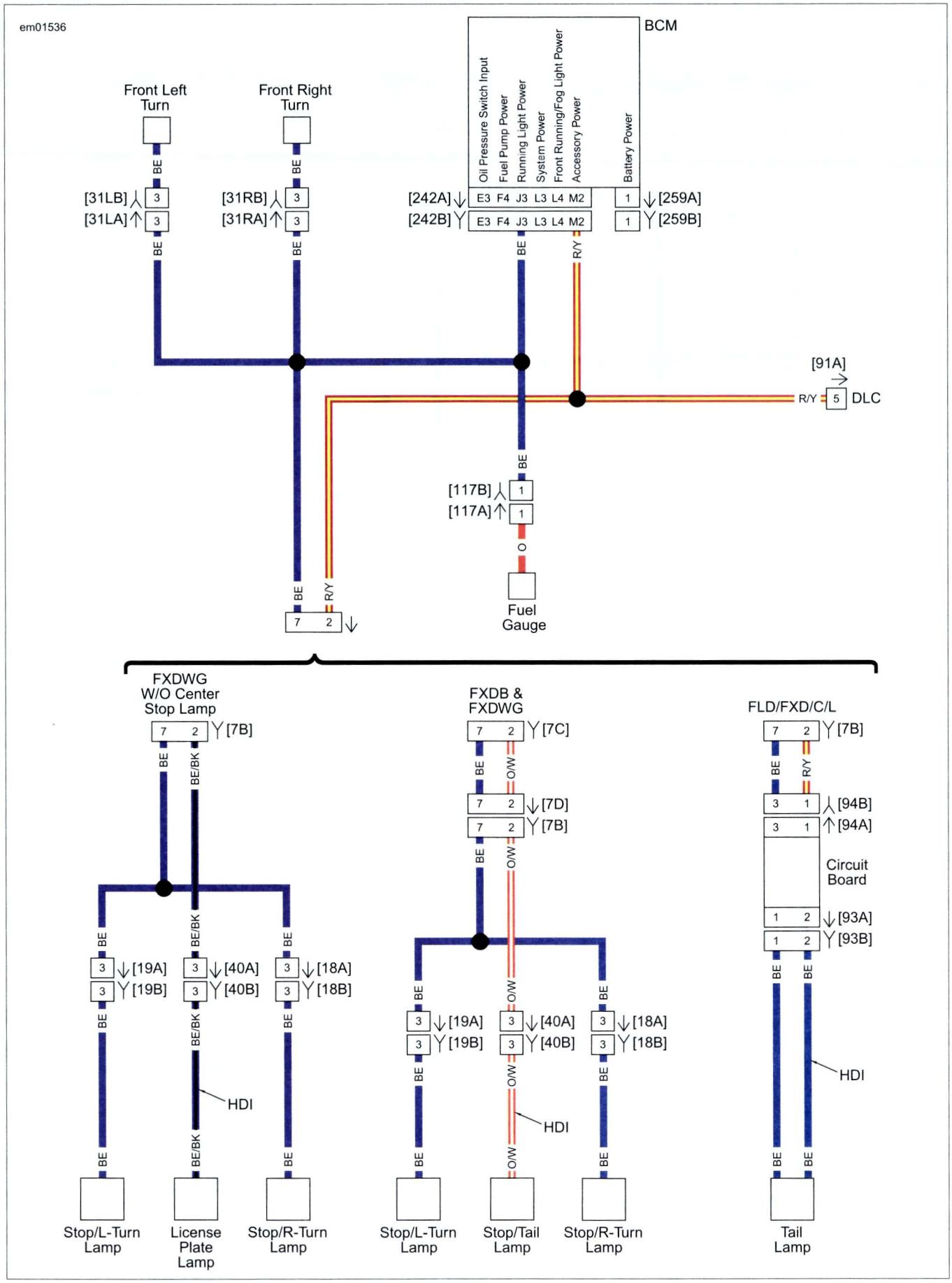

Figure A-5. Ignition and Accessory Power Distribution: 2 of 3

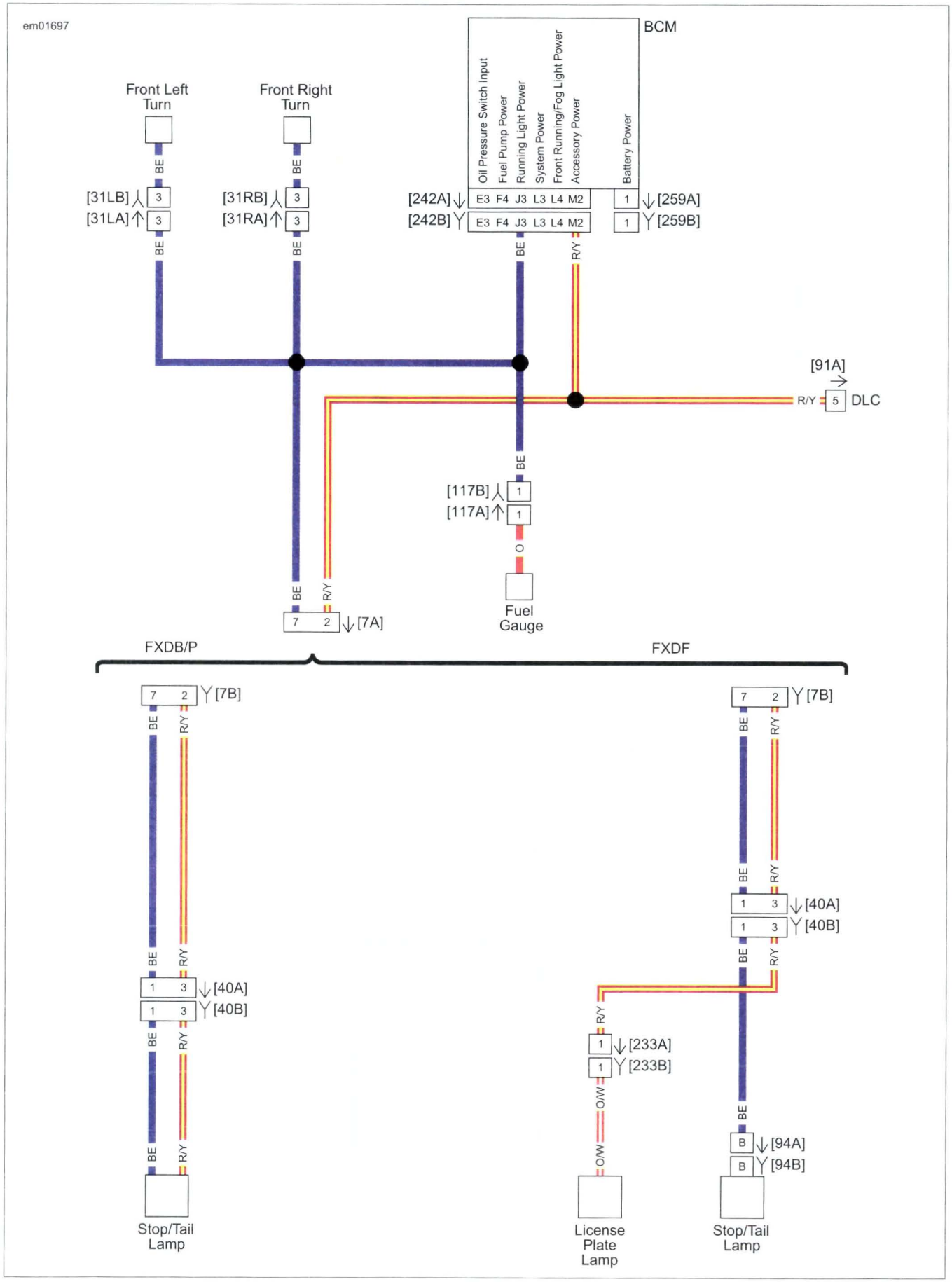

Figure A-6. Ignition and Accessory Power Distribution: 3 of 3

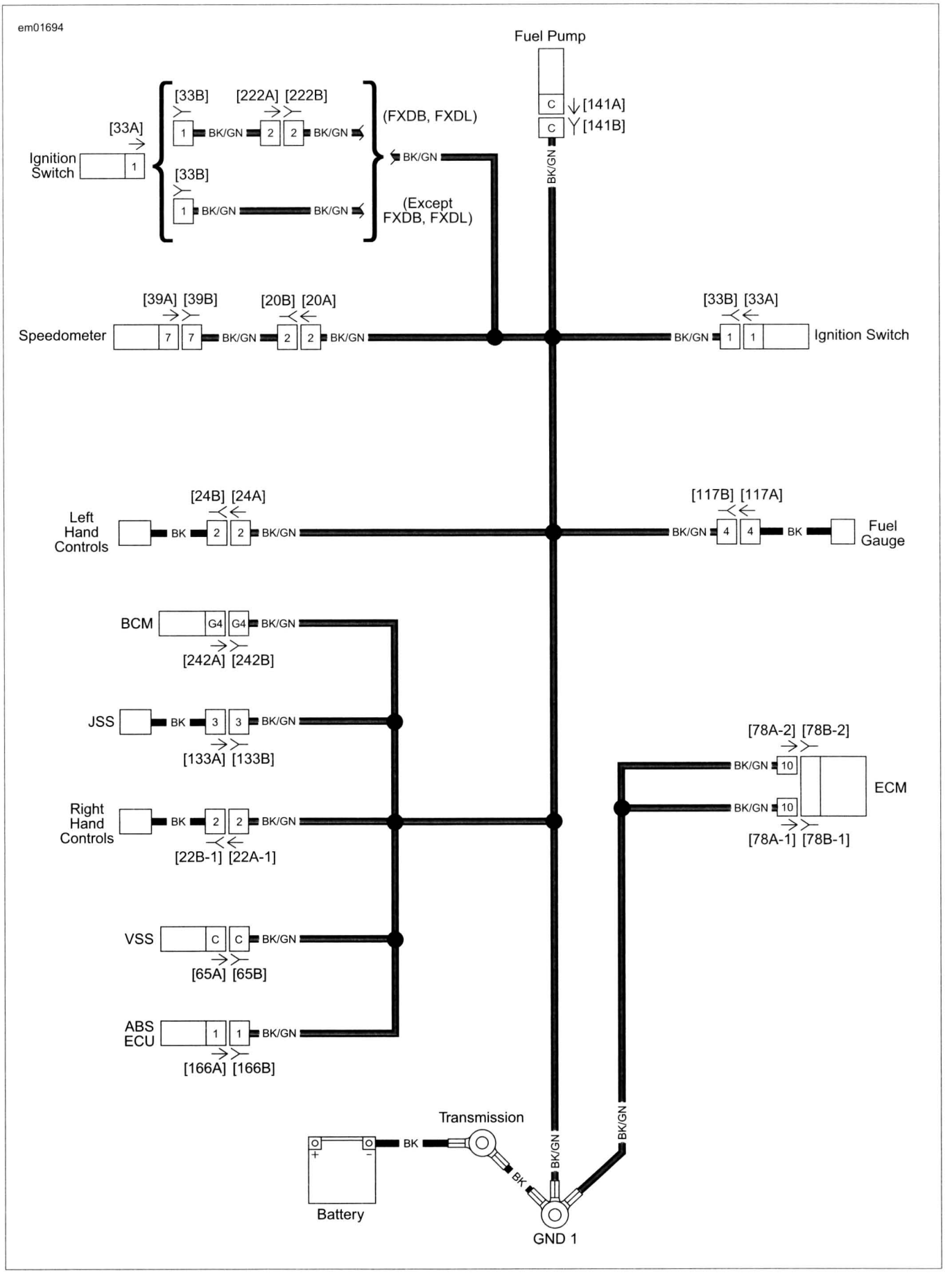

Figure A-7. Sensor Grounds

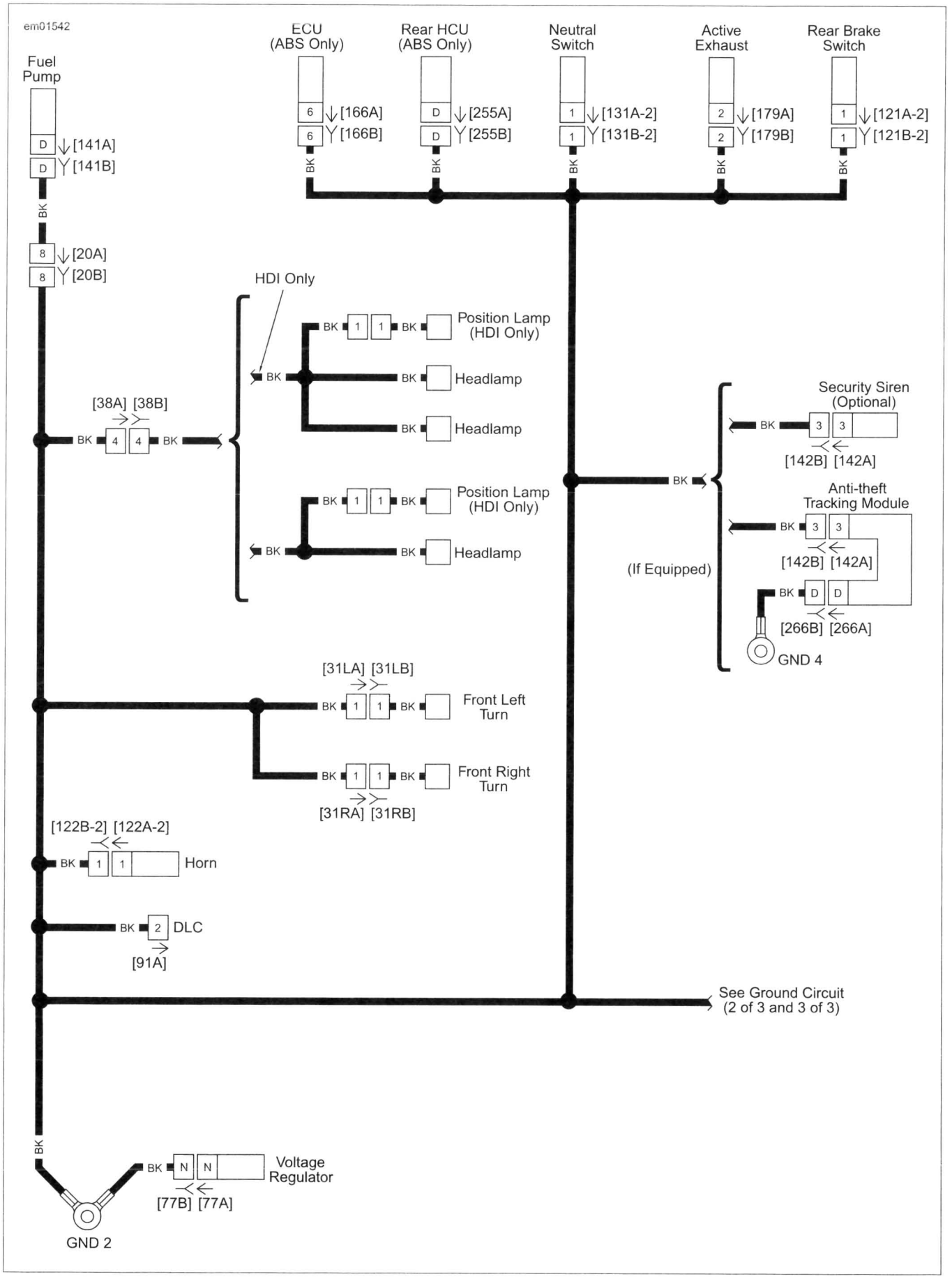

Figure A-8. Ground Circuit: 1 of 3

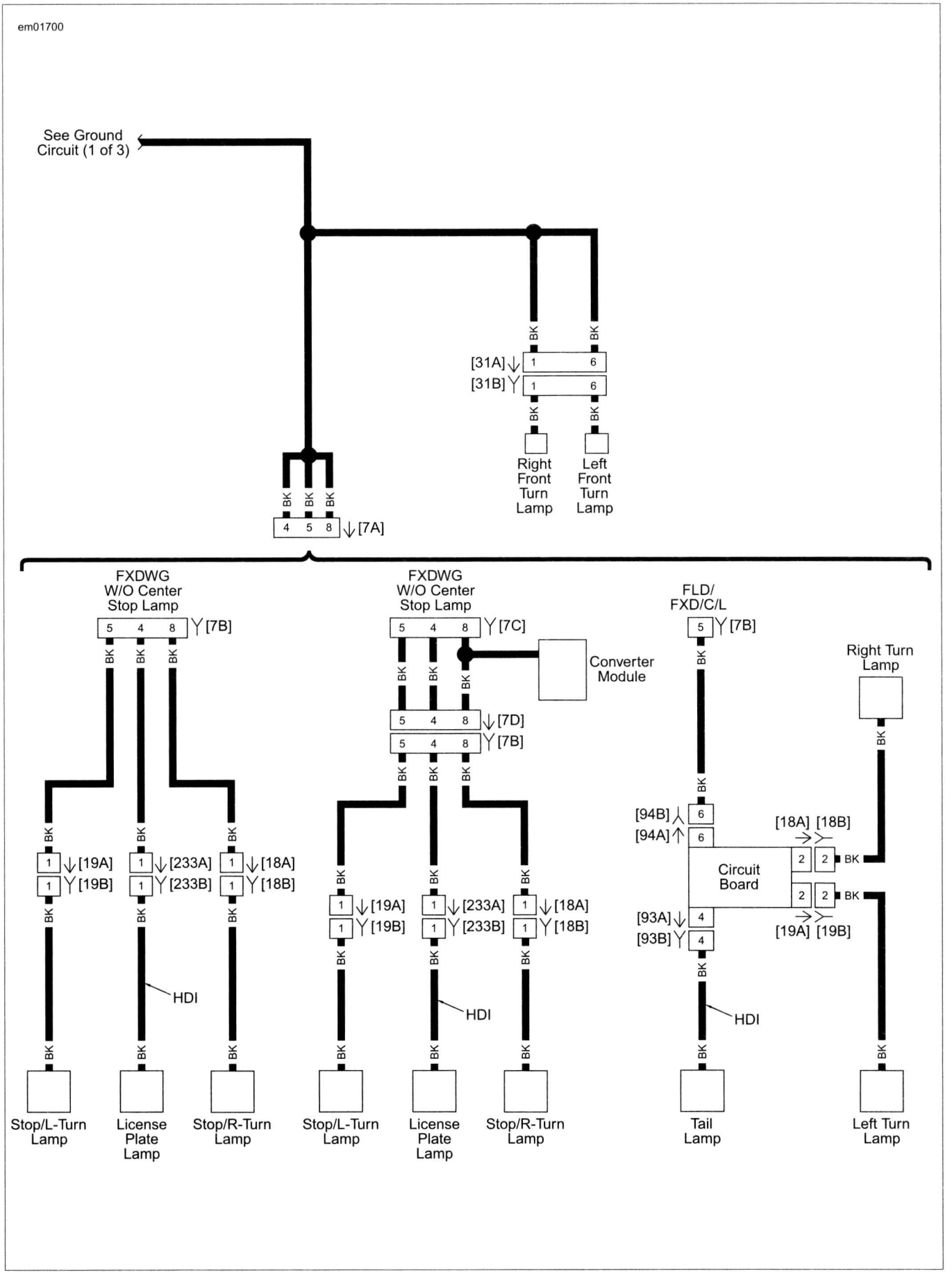

Figure A-9. Ground Circuit: 2 of 3

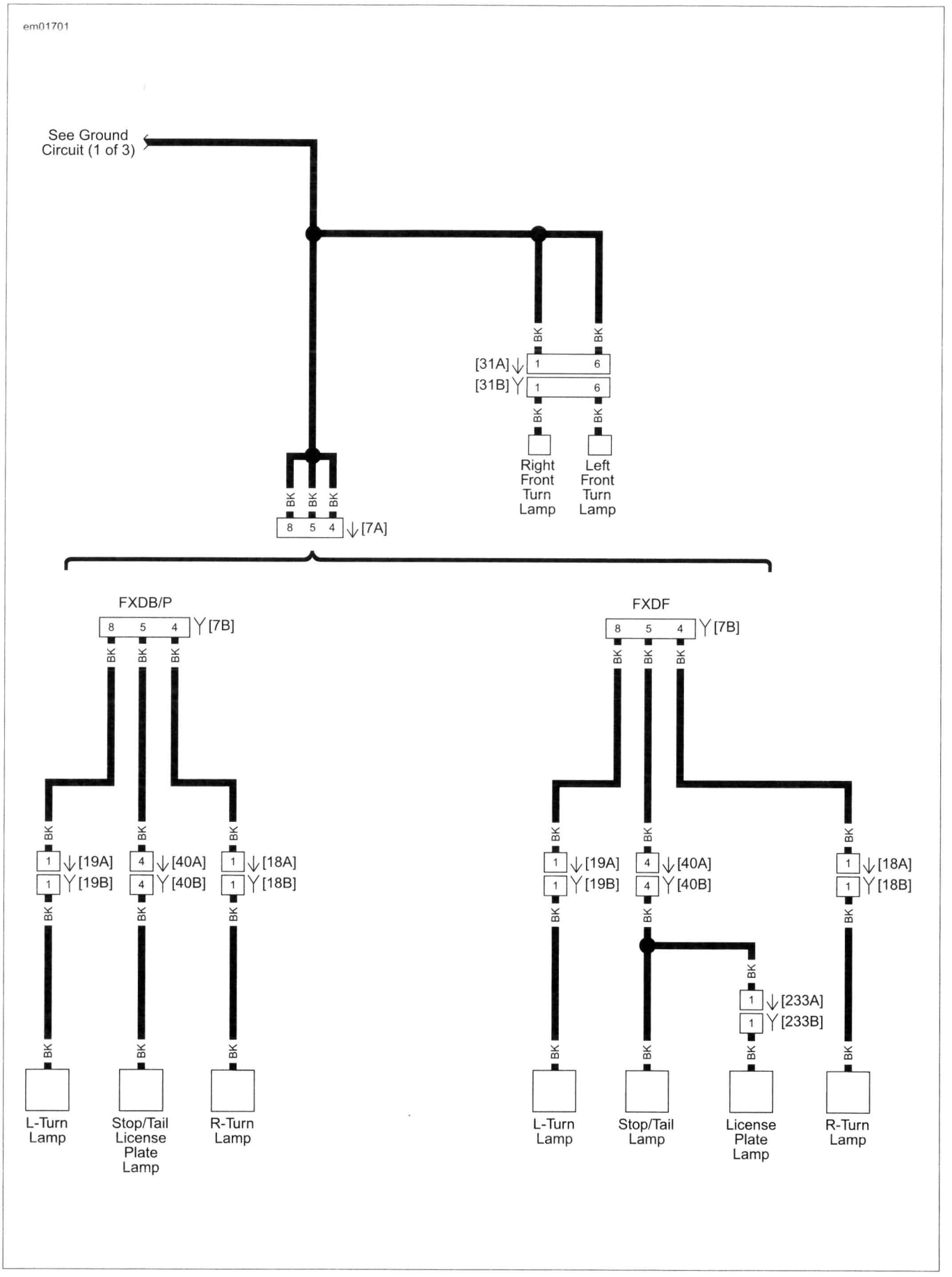

Figure A-10. Ground Circuit: 3 of 3

Figure A-11.
Front Lighting and Hand Controls: 2016 Dyna

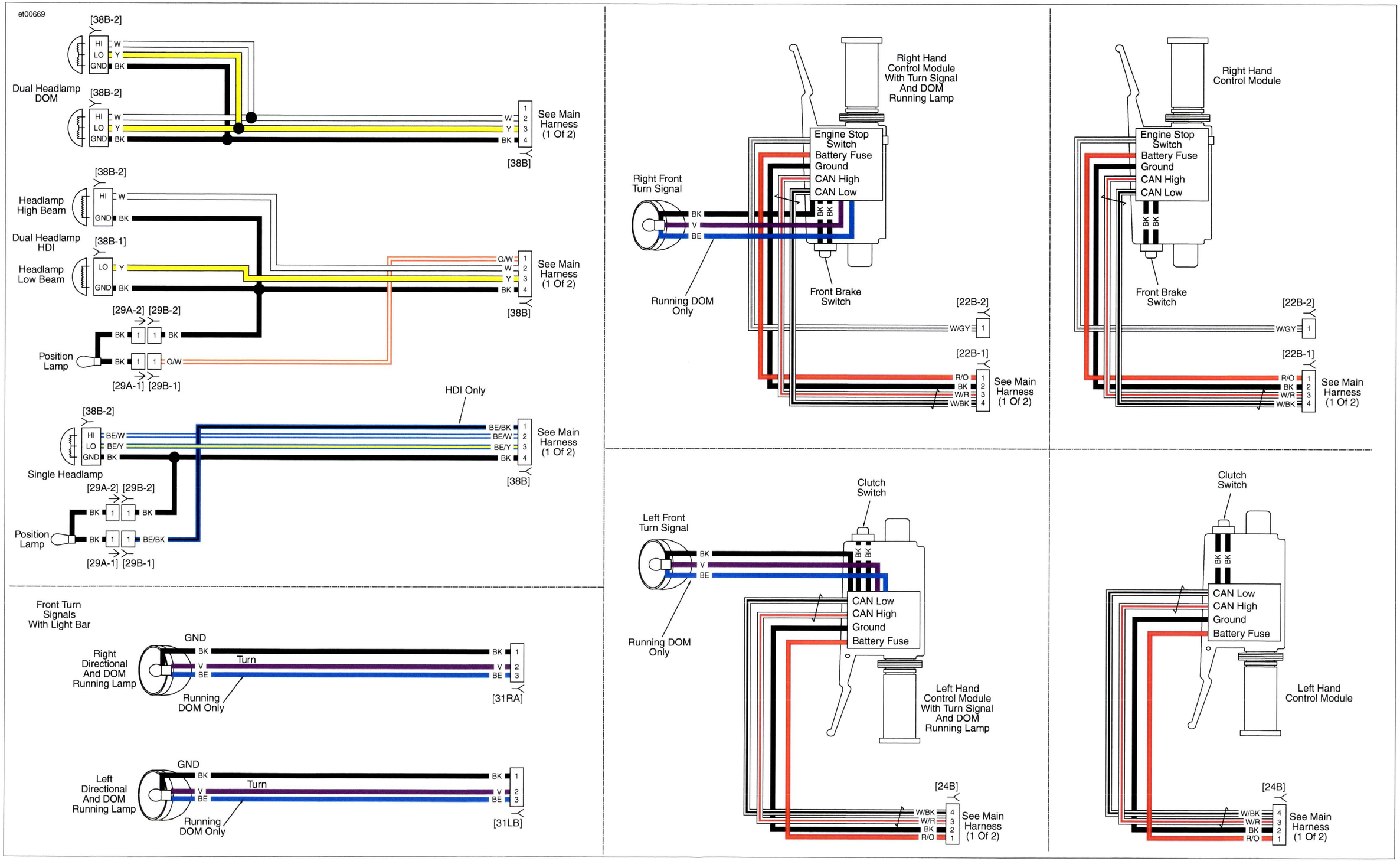

Figure A-11. Front Lighting and Hand Controls: 2016 Dyna

Figure A-12.
Main Harness 1 of 3 (except FXDL): 2016 Dyna

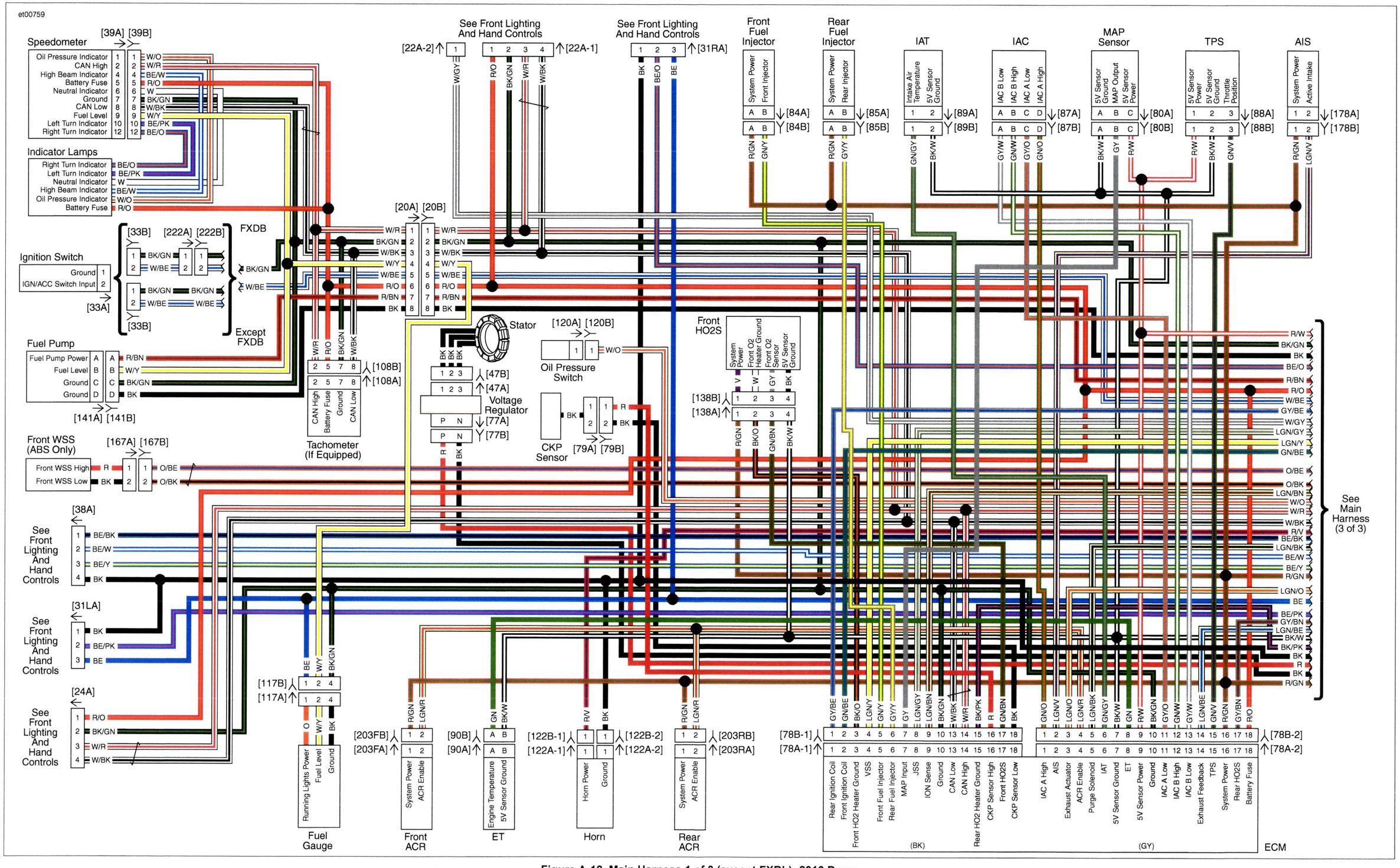

Figure A-12. Main Harness 1 of 3 (except FXDL): 2016 Dyna

Figure A-13.
Main Harness 2 of 3 (FXDL): 2016 Dyna

et00760

Figure A-13. Main Harness 2 of 3 (FXDL): 2016 Dyna

Figure A-14.
Main Harness 3 of 3: 2016 Dyna

et00670

GND 1
GND 2
See Rear Lighting
[7A]
JSS
Security Antenna
Rear WSS (ABS Only)
Transmission
Battery
Starter Stud
Fuse Block
Main 40A
Battery 15A
P&A 15A
[64B]
DLC
[91A]
[266A] [266B]
Anti-theft Tracking Module
(If Equipped)
Ground
Start Enable
Not Used
Not Used
Power
Signal
Ground
[142A] [142B]
Security Siren (Optional)
Security Siren
[133A]
[133B]
5V Sensor Power
JSS Signal
Ground
[209A]
[209B]
Security Antenna High
Security Antenna Low
Rear WSS High
Rear WSS Low
[168A]
[168B]
[128B] [128A]
Starter Solenoid
R/BK
Starter Solenoid Power
[259B] [259A]
BCM
Battery Power
Security Antenna High
Start Enable
Security RF Antenna
Security Antenna Low
Ignition Switch Input
Engine Stop Switch Input
CAN High
Neutral Switch Input
CAN Low
Oil Pressure Switch Input
Horn Power
Brake Switch Input
Fuel Pump Power
Ground
Security Siren
Right Front Turn Signal
Running Light Power
Left Front Turn Signal
Right Rear Turn Signal
Brake Light Power
Left Rear Turn Signal
Starter Solenoid Power
System Power
Front Running/Fog Light Power
Accessory Power
High Beam Power
Low Beam Power
[242B] [242A]
See Main Harness (1 or 2 of 3)
R/W
BK/GN
BK
BE/O
R/BN
R/O
W/BE
GY/BE
W/GY
LGN/GY
LGN/Y
GN/BE
O/BE
O/BK
LGN/BN
W/O
W/R
W/BK
R/V
BE/BK
LGN/BK
BE/W
BE/Y
R/GN
LGN/O
BE
BE/PK
GY/BN
LGN/BE
BK/W
BK/PK
R
[121B-2] [121B-1]
[121A-2] [121A-1]
Rear Brake Switch
[83B] [83A]
System Power
ION Sense
Rear Ignition Coil
Front Ignition Coil
Ignition Coil
[65B] [65A]
5V Sensor Power
VSS Input
Ground
VSS
[137A] [137B]
System Power
Rear O2 Heater Ground
Rear O2 Sensor
5V Sensor Ground
Rear HO2S
[166B] [166A]
Ground
CAN High
Front WSS Low
Switched/AUX Lamp Power
Battery Power (ECU)
Ground
CAN Low
Front WSS High
Rear WSS High
Rear WSS Low
Battery Power (Motor)
ECU (ABS Only)
[179B] [179A]
System Power
Ground
Exhaust Actuator
Exhaust Feedback
Active Exhaust
[95B] [95A]
System Power
Purge Solenoid
Purge Solenoid
[131B-1] [131B-2]
[131A-1] [131A-2]
Neutral Switch

Figure A-14. Main Harness 3 of 3: 2016 Dyna

Figure A-15.
Rear Lighting: 2016 Dyna

et00720

FXDL, FXDB/B/P

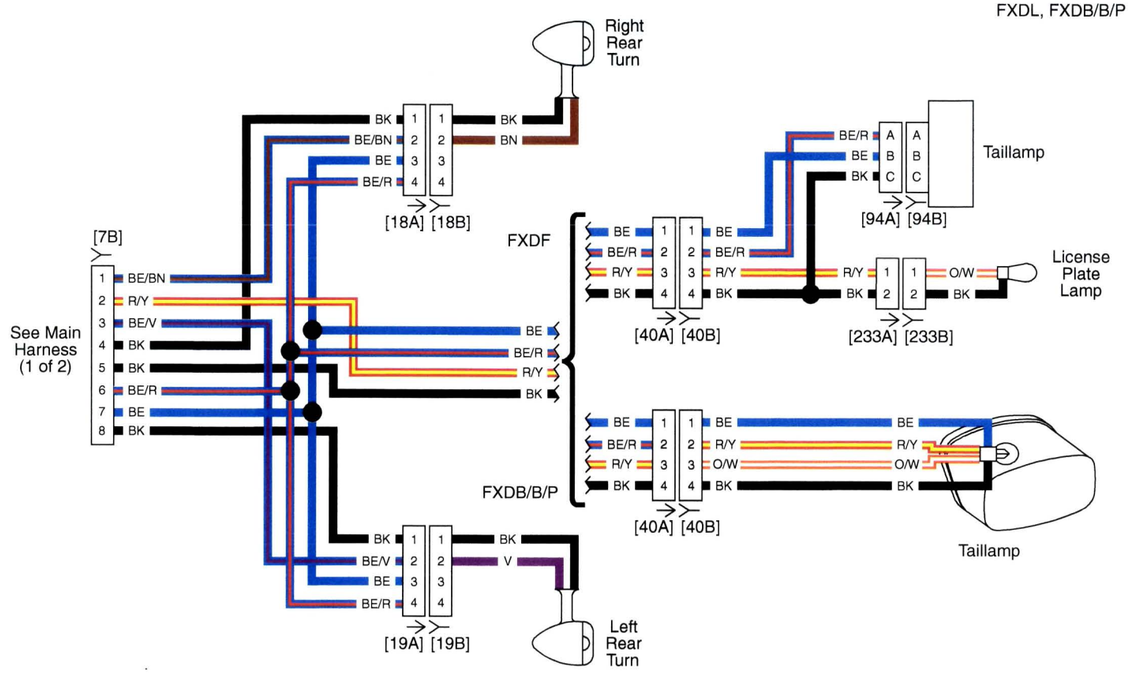

FXDB/B, FXDWG - HDI W/Center Stop Lamp

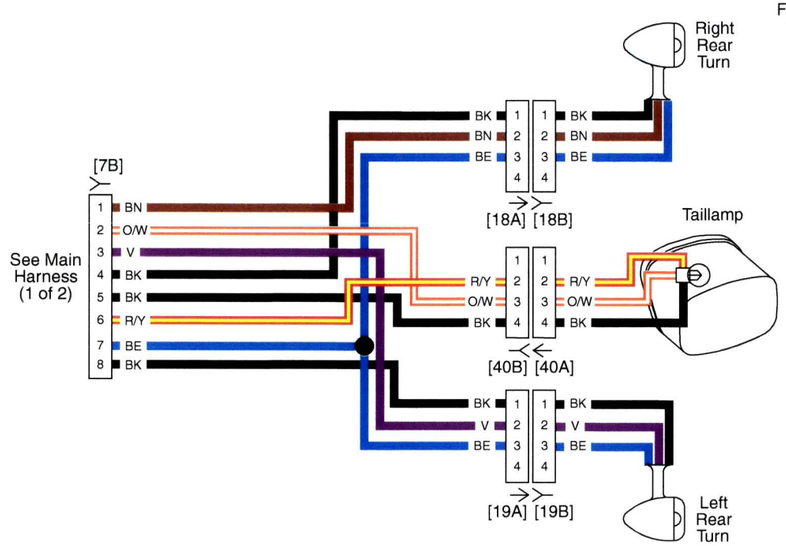

FLD, FXDL

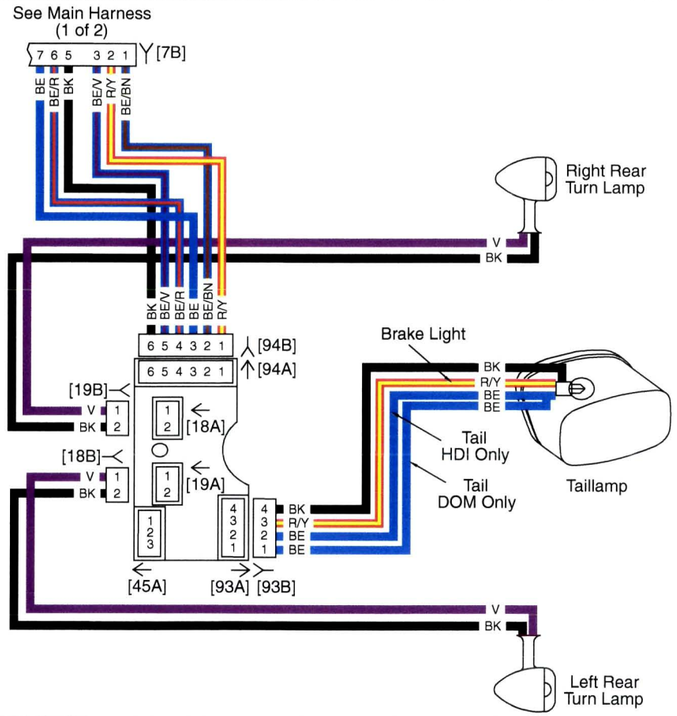

FXDWG - DOM Without Center Stop Lamp

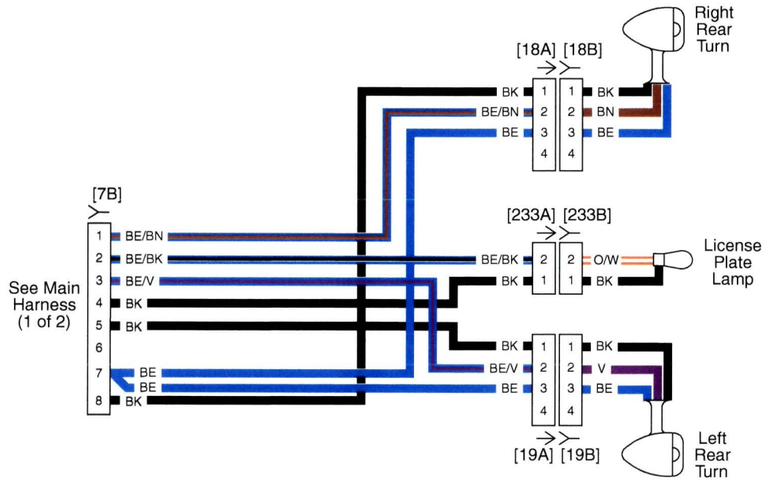

Figure A-15. Rear Lighting: 2016 Dyna